Instructions for Tightening Standard Packings

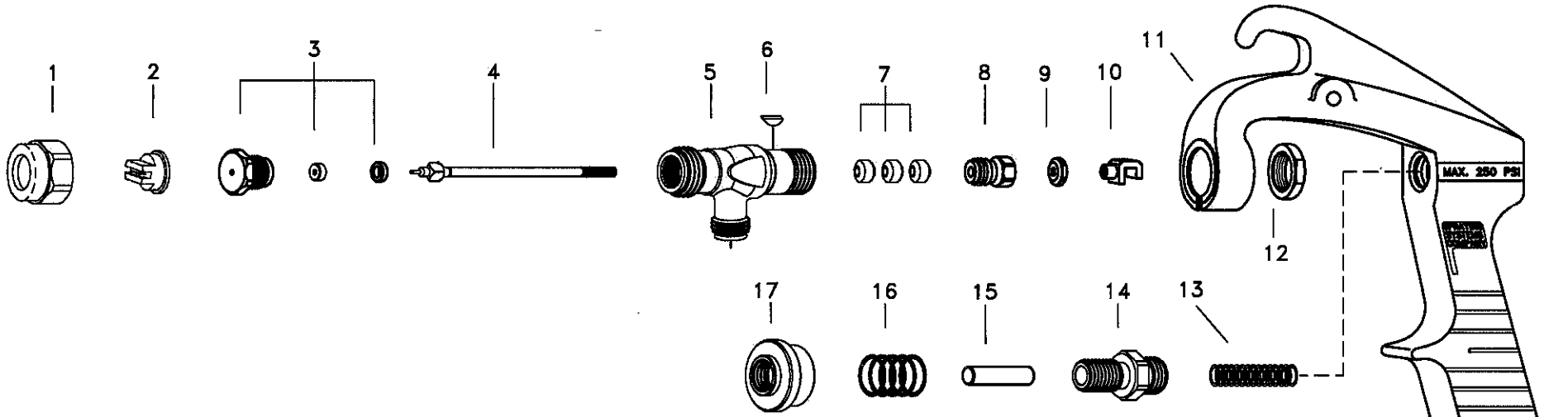

After use, the packings (7) may require tightening.

If leakage is noticed coming from around the packing screw (8) the following procedure should be followed after shutting off the gun and relieving the liquid line pressure.

A. Tighten the packing screw (8) 1/4 turn in a clockwise direction (when viewed from the rear of the gun).

B. Test gun to see if leakage still occurs.

C. If leakage does not occur, return to service.

D. If leakage still occurs, repeat steps A thru C.
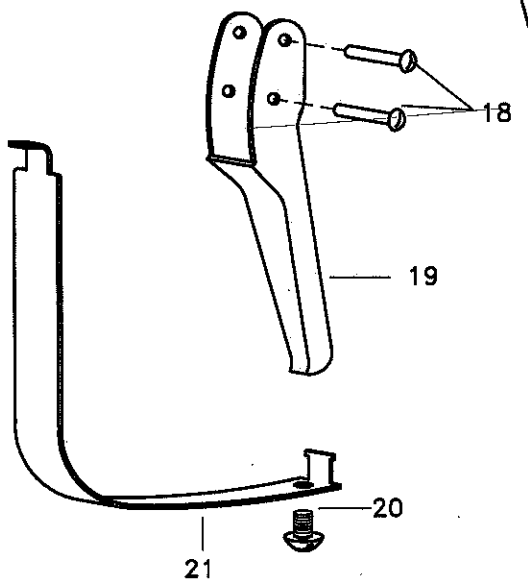
E. If after a total of 1/2 turn tightening, the leakage still occurs, you should replace packing with new ones.